Burner 80 cm - 31” insert - Technical drawing

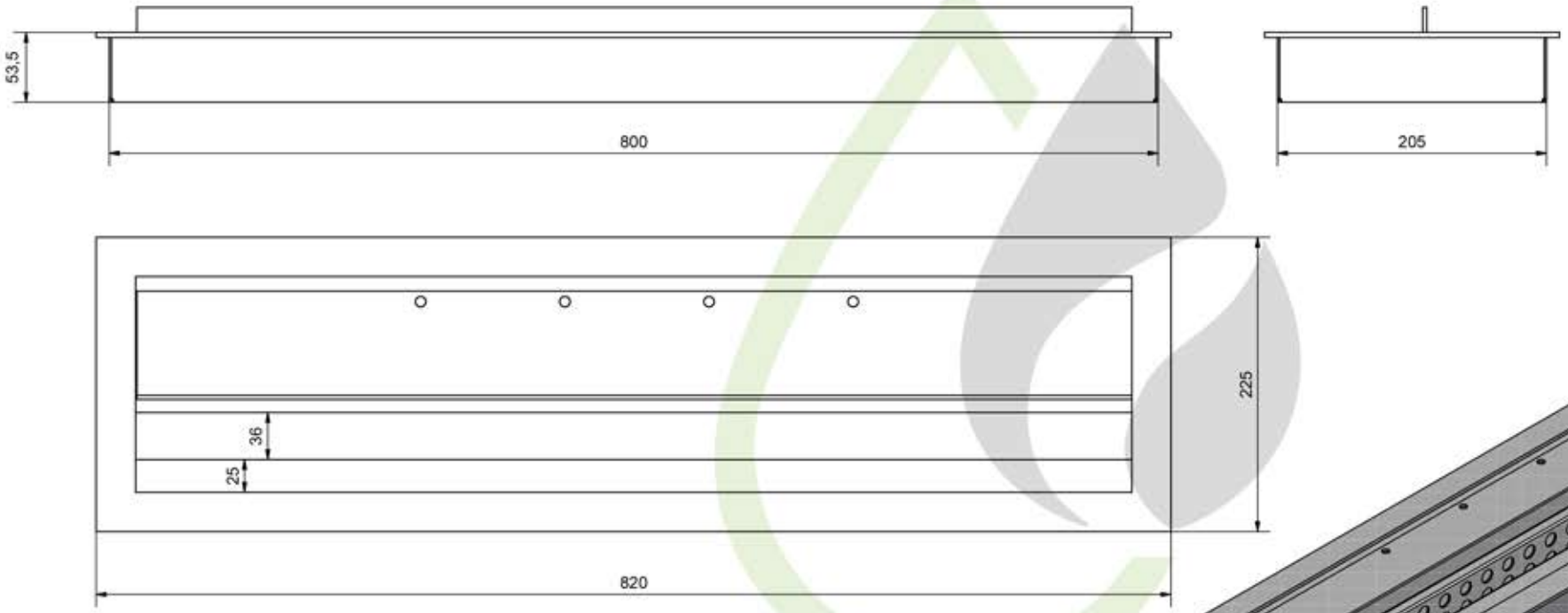

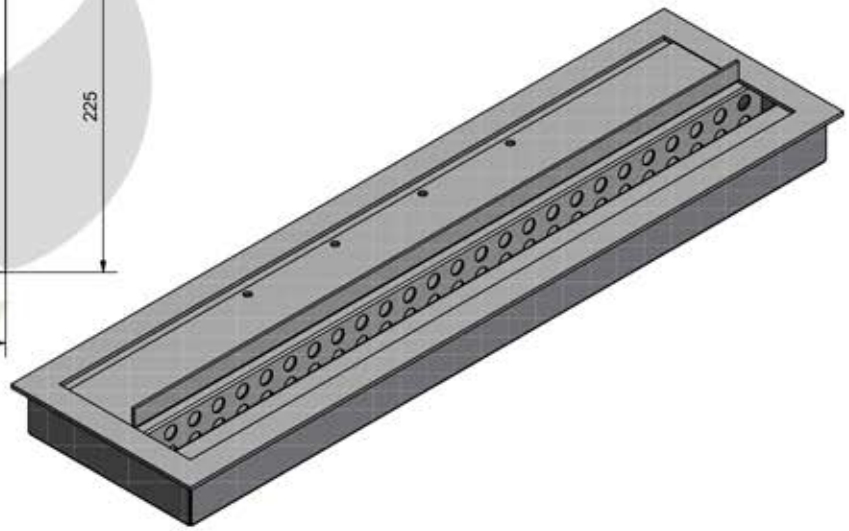

Measures are in mm

Product Dimensions	L 800 x H 53.5 x D 205 mm (top plate L 820 x D 225 mm)
	L 31½" x H 2" x D 8" (top plate L 32" x D 8½")
Weight	9½ kg / 21 lbs
Burner	3½ L / 3½ qts burner - adjustable flame
Burning time	+/- 5 hrs - 0.7 l/h - ½ qt/h
Heating Capacity	3½ KW / 11942 BTU
Minimum Room surface	62 m^3(roof 2.45 m) / 2190 ft^3 (roof 8 ft)
Advised air exchange	every one hour for rooms < 110 m^3- < 3884 ft^3
Last updated	April 2015

Bio-Blaze®